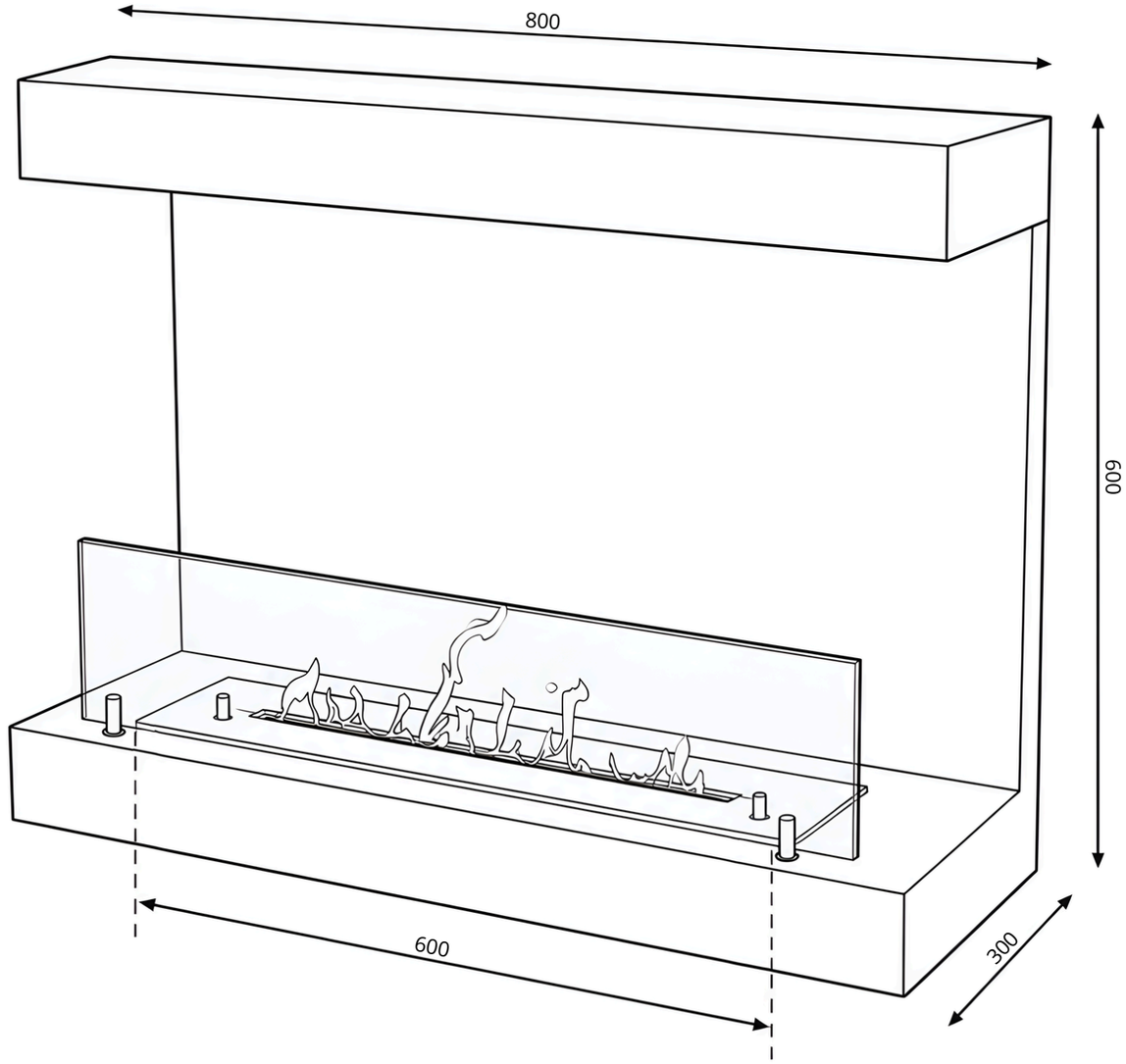

WILD FLAME

MANCHE HANGING FIREPLACE
800 X 600 X 300 MM
WWW.WILDFLAME.NL