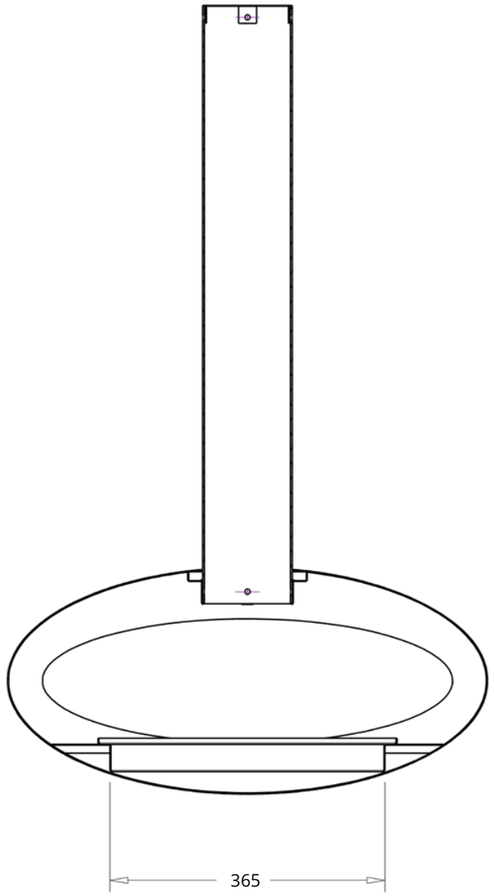

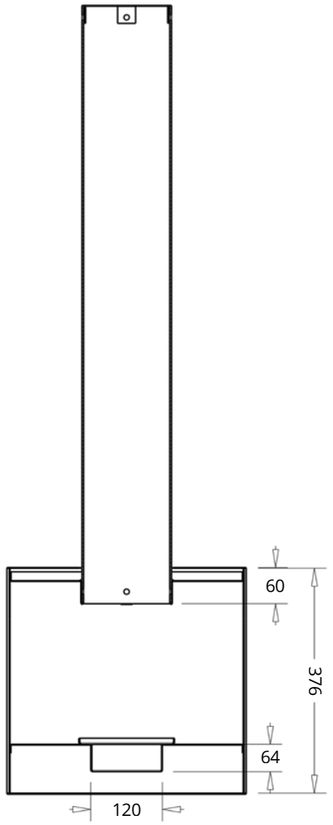

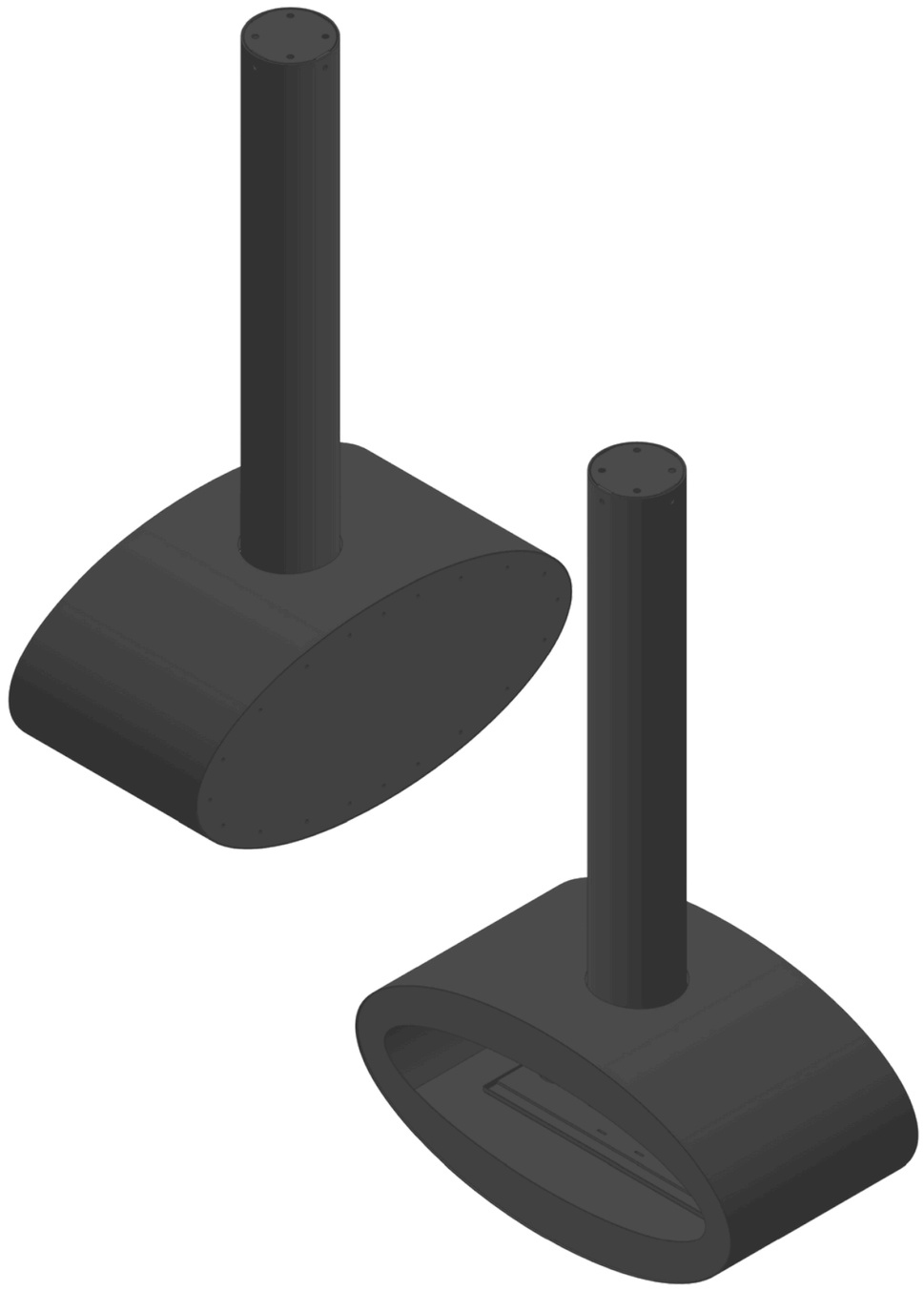

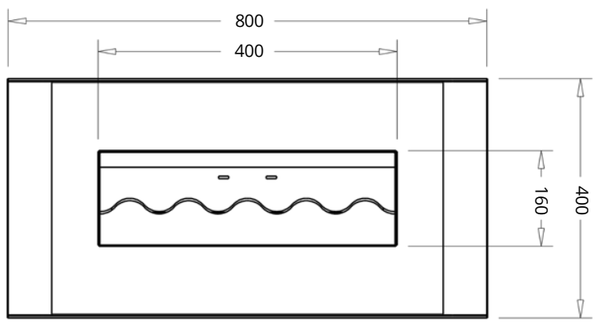

WILD FLAME

SCHEME OF OVA TUBE CLOSE 800 MM
800 X 400 X 376 MM
WWW.WILDFLAME.NL